THE UNIVERSITY OF ARIZONA

COLLEGE OF AGRICULTURE AND LIFE SCIENCES

COOPERATIVE EXTENSION
School of Plant Sciences

An Update on Weed Management Tools: Tillage

Bill McCloskey
Extension Weed Science

Mechanical Tillage: Hand Hoeing & Pulling

- Earliest and most primitive form of weed control
- Began 10,000 years ago with crop domestication
  - Major method of weed control in the developing world.
  - Occupies a significant portion of the world's human population where labor intensive, subsistence farming is practiced.
- Time consuming & expensive in large areas with dense weeds. Best suited to:
  - Small areas,
  - High value crops,
  - A new, noxious weed infestation with a few scattered plants.

Mechanical Tillage: Hand Hoeing & Pulling

- The use of herbicides and close cultivation can reduce the amount of hand hoeing required to stop weed seed production.
- When herbicides are not used, hand removal, along with tillage is a major alternative for weed control
  - Vegetable production
  - Organic farming
  - Wild land and range ecosystems
    - Mechanical tillage is frequently not practical.
    - Biological control is often critical in these situations.

Conventional Tillage System

- Tillage systems for U.S. annual crops include:
  - Primary tillage for initial disruption of the soil with an implement such as a moldboard plow, disk plow or chisel plow.
    - Leaves soil loosened, rough, and relatively free of surface residues and green vegetation.
  - Secondary tillage for seedbed preparation using tandem disks, field cultivators, bed conditioners, and powered tillers.
    - Goal is to further level, disrupt and firm the soil and remove weed growth.
  - Crop planting and establishment.

Mechanical Tillage

- The moldboard plow is an example of a primary tillage tool.

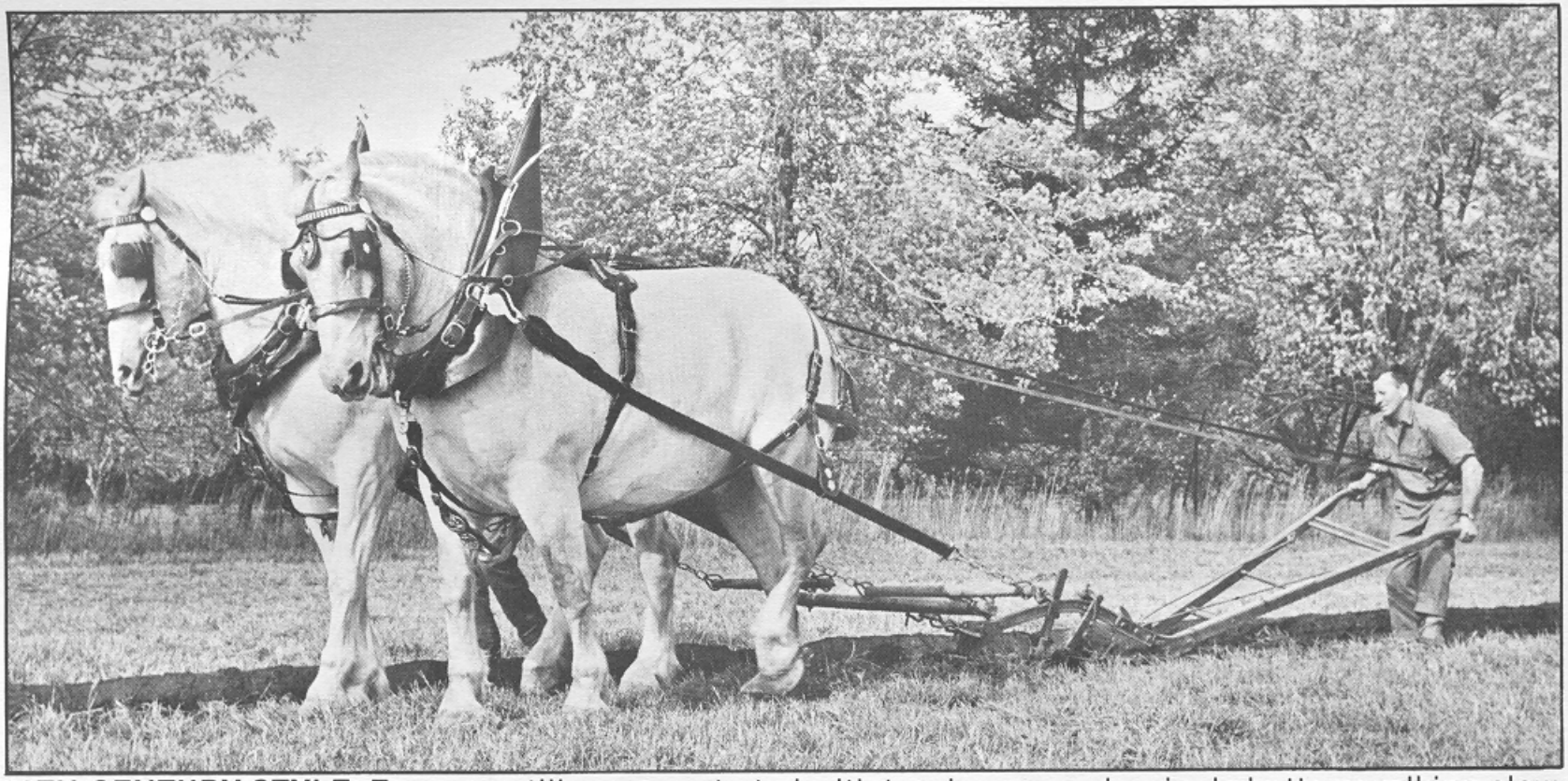

19TH CENTURY STYLE. For years, tillage was started with two horses and a single bottom walking plow.

Mechanical Tillage

- The moldboard plow – an example of a primary tillage tool.

IS THIS TRIP REALLY NECESSARY? While moldboard plowing offers advantages to some farmers, a wide variety of reasons can also be cited as to why such excessive tillage is not necessary in today's world.

Conventional Tillage System

- Tillage systems used for U.S annual crops include:
  - Crop planting and establishment.
  - Secondary tillage for selective cultivation and removal of weeds after the crop has been planted.
    - Broadcast implements (rotary hoes & light harrows) in deep-seeded or well-rooted crops.
    - Cultivators to remove weeds between crop rows.

Secondary Tillage for Weed Control

- Tillage implements for weed control were originally mounted in front of tractor drivers in the middle of tractor.
  - Weed control tools move in the direction driver steers.
- Tools included knives and sweeps of various types.

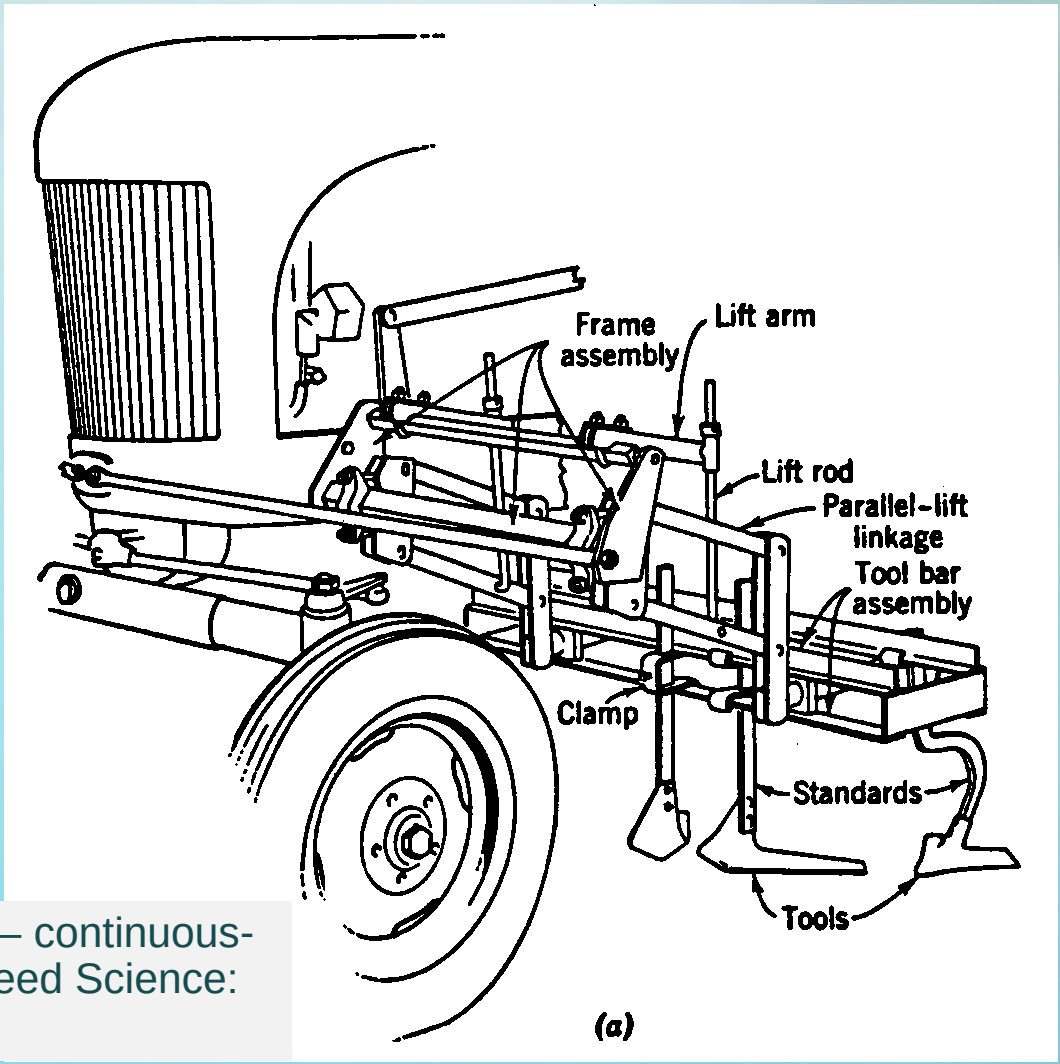

Figure 2-5a. Row-crop cultivator – continuous-type bar. Anderson WP. 1977. Weed Science: Principles. West Publishing Co.

Secondary Tillage for Weed Control

- Secondary tillage implements for weed control.

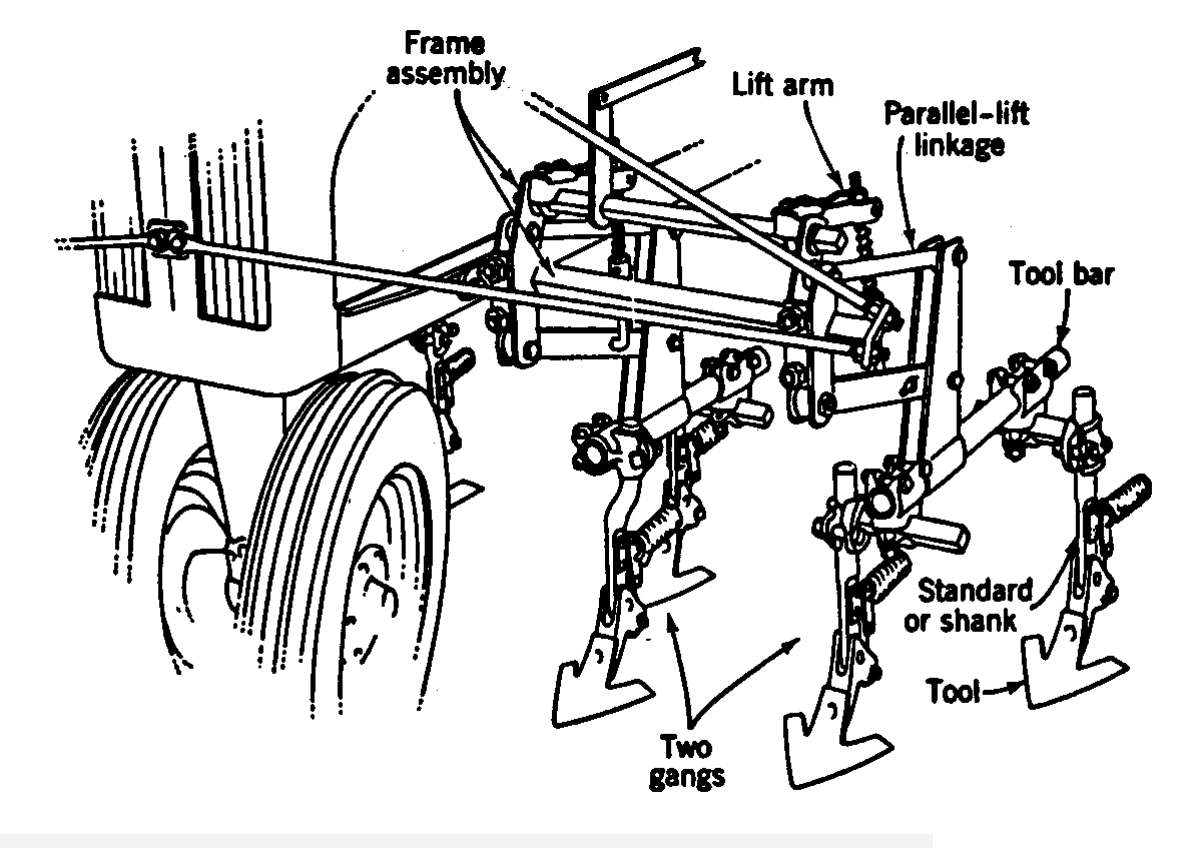

Figure 2-5b. Row-crop cultivator – sectional tool bar. Anderson WP. 1977. Weed Science: Principles. West Publishing Co.

Secondary Tillage Tools

Secondary tillage tools included:

(A) shovels,

(B) sweeps,

(C) half-sweeps,

(D) duckfoot sweeps, and

(E) knives.

Tillage tools are set to work the soil to a depth of 1 to 2 inches.

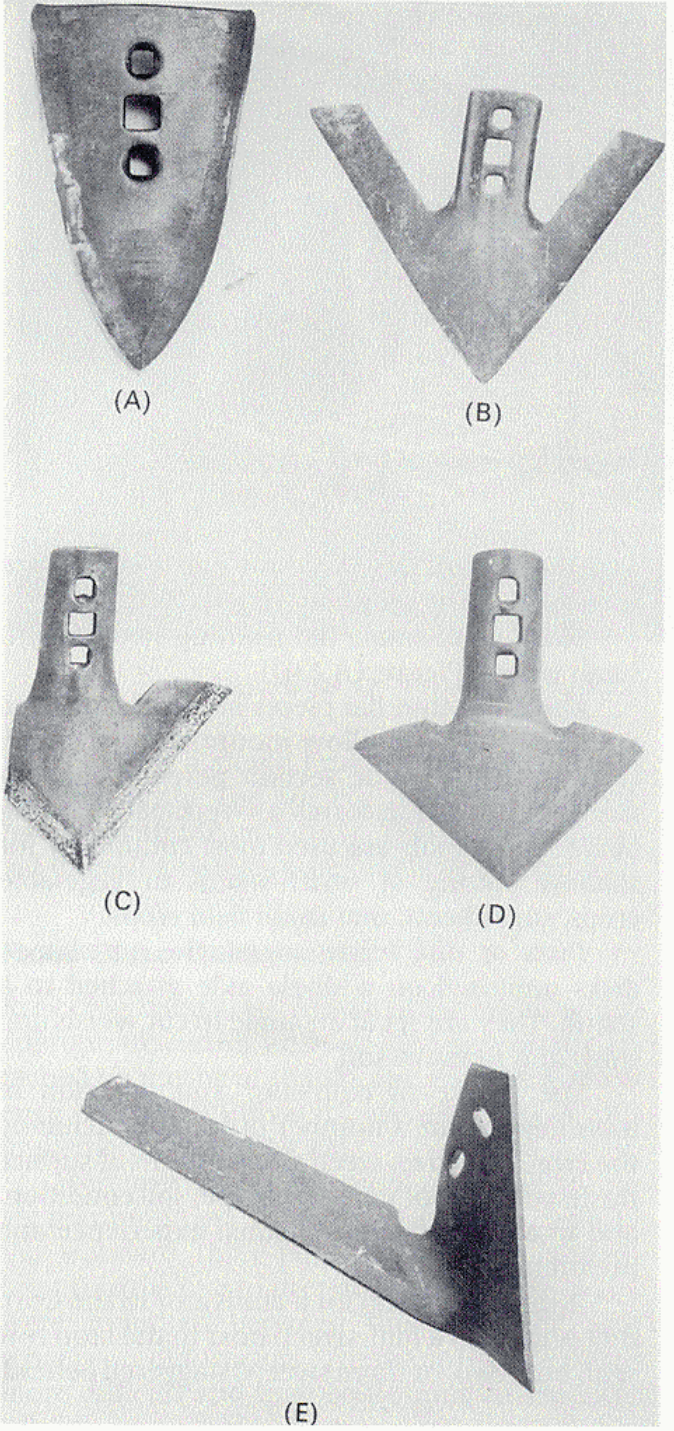

Fig. 24.25. Tools for row crop cultivators. Ross MA, CA Lembe. 2009. Applied Weed Science, 3rd Ed. Pearson Prentice Hall

Secondary Tillage Implements

- Other secondary tillage implements for weed control include rolling cultivators and field cultivators.

Rolling cultivator

Fig. 24.28 Tines on a rolling cultivator. Ross MA, CA Lembe. 2009. Applied Weed Science, 3rd Ed.

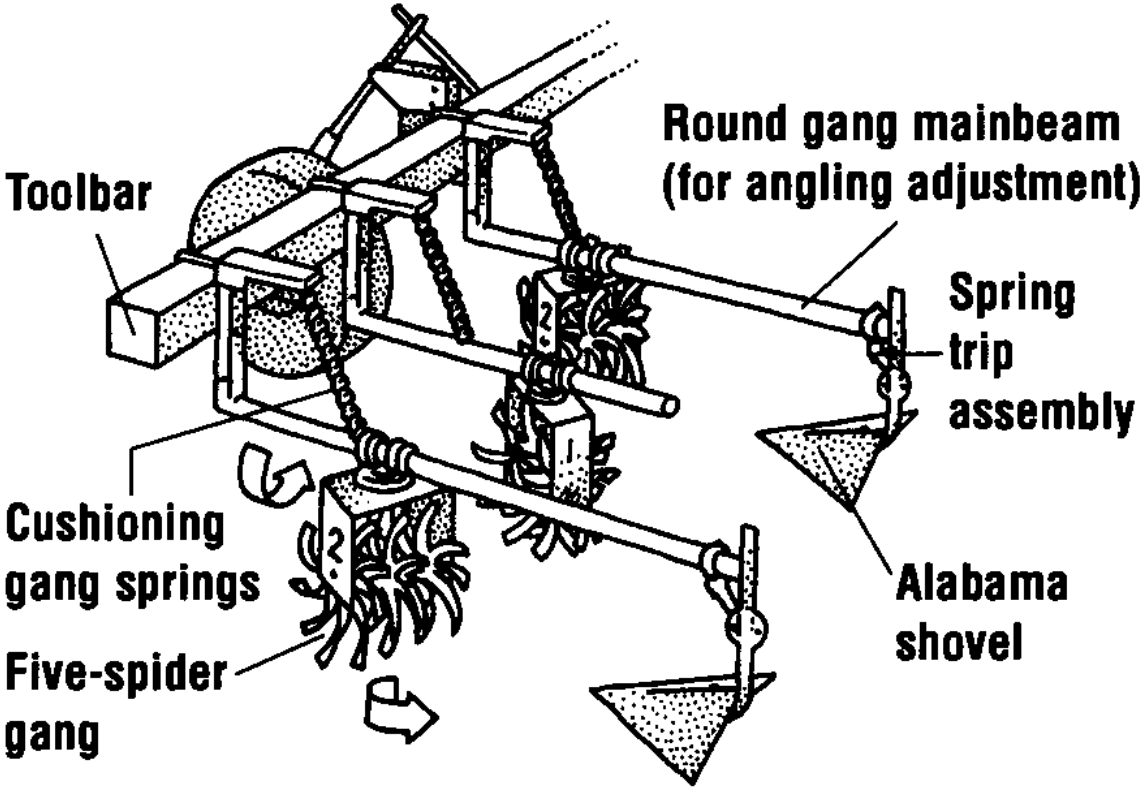

Rolling cultivator. Steel in the Field. 1997. Edited by G Bowman. Page 23. Sustainable Agriculture Network handbook series; 2.

Secondary Tillage Implements

- Other secondary tillage implements for weed control include rolling cultivators and field cultivators.

Rolling cultivator

Note width of gap between tillage tools.

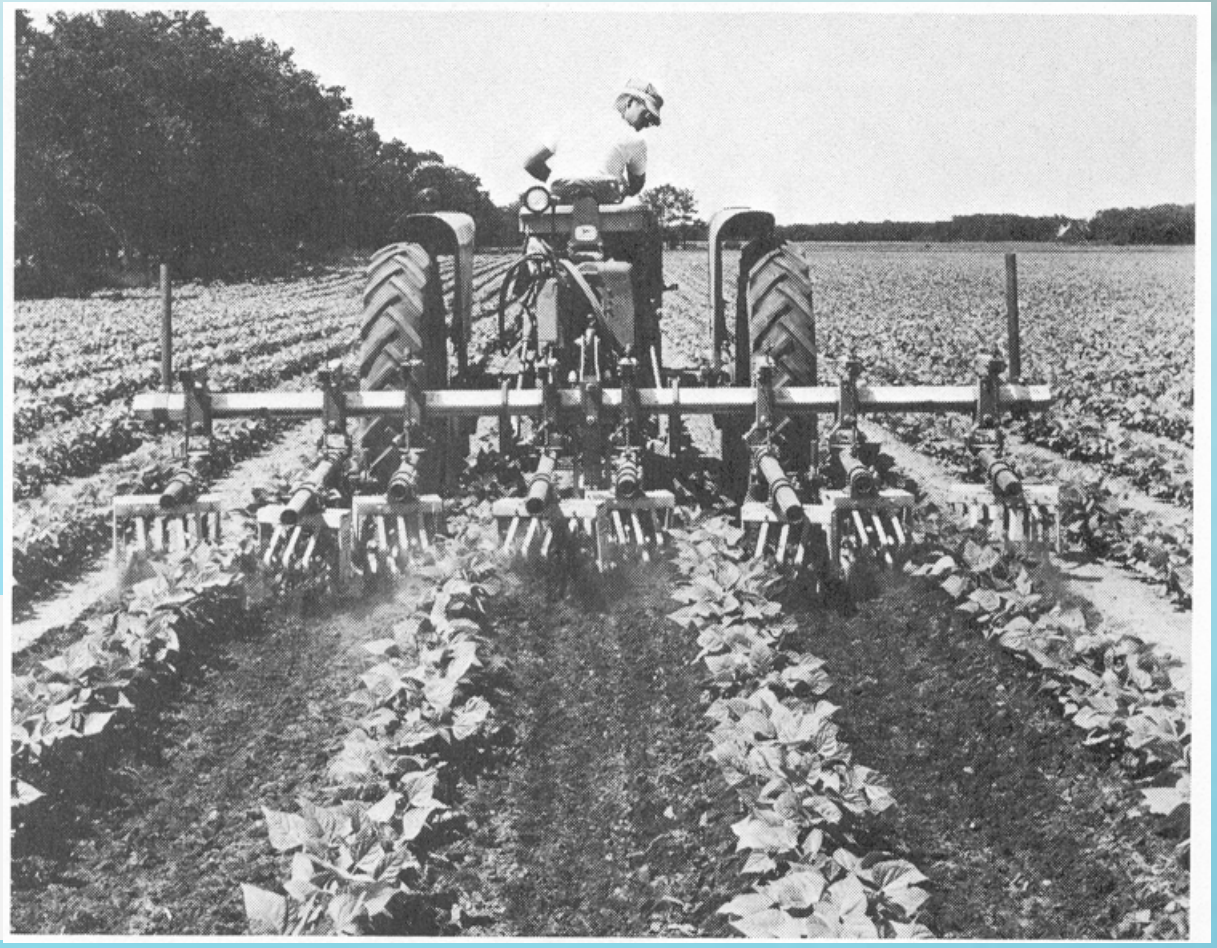

Figure 2-15. Gangs of rotary hoes attached to pipe beams with swivel joints (courtesy of Lilliston Corp.) Anderson WP. 1977. Weed Science: Principles. West Publishing Co.

Secondary Tillage Implements

- Other secondary tillage implements for weed control include rolling cultivators and field cultivators.
  - Field cultivator with and without rolling crop shield.
  - Crop shields protect crop seedlings from burial and soil movement.

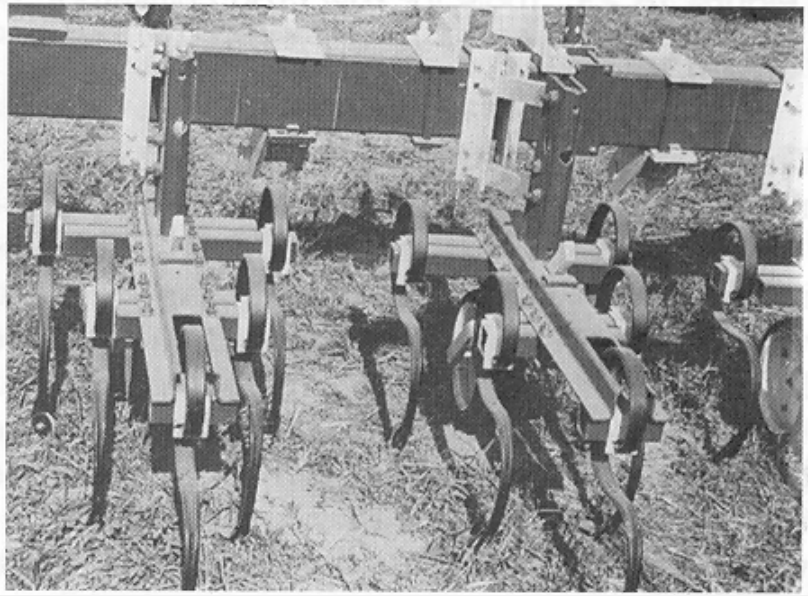

Fig. 24.24 Row crop cultivator. Ross MA, CA Lembe. 2009. Applied Weed Science, 3rd Ed.

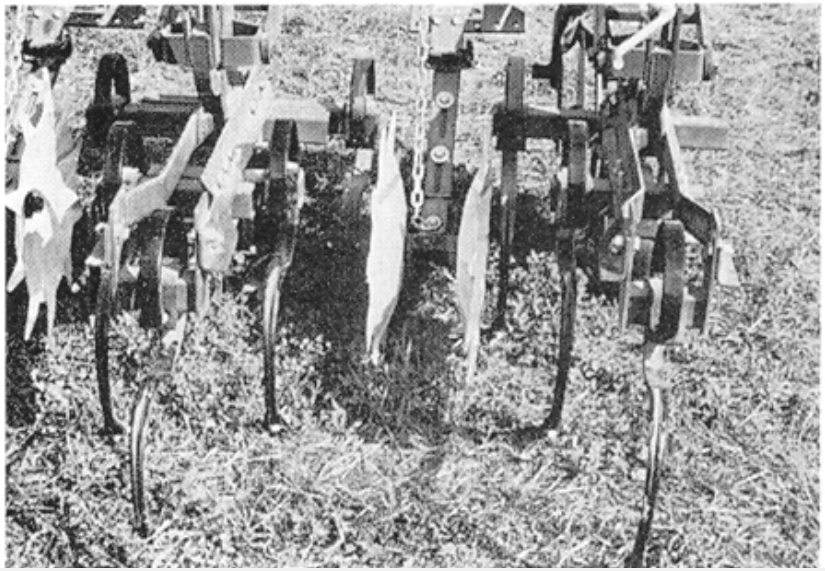

Fig. 24.27 Spring tine cultivator with shields. Ross MA, CA Lembe. 2009. Applied Weed Science, 3rd Ed.

Secondary Tillage Implements

- Other secondary tillage implements for weed control include rolling cultivators and field cultivators.

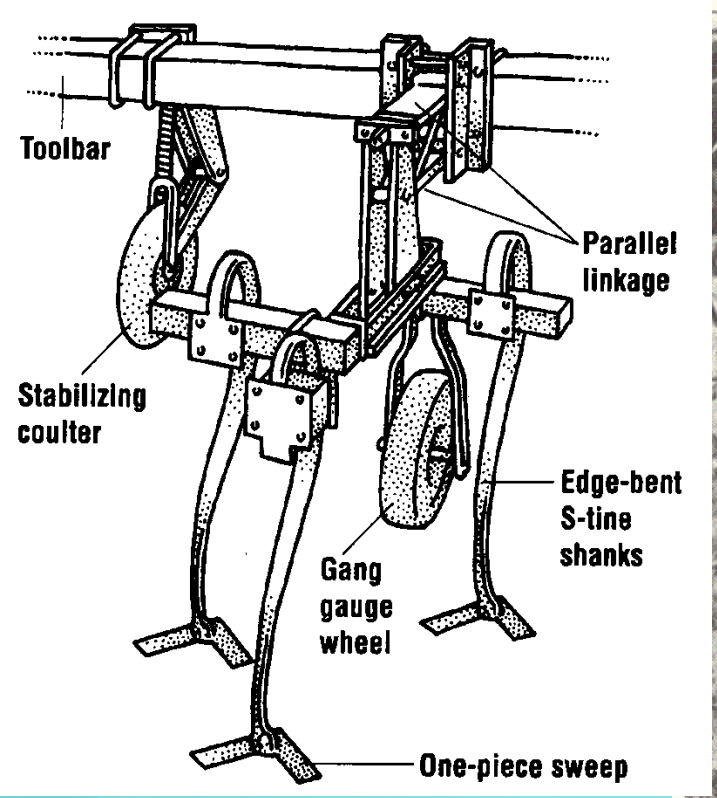

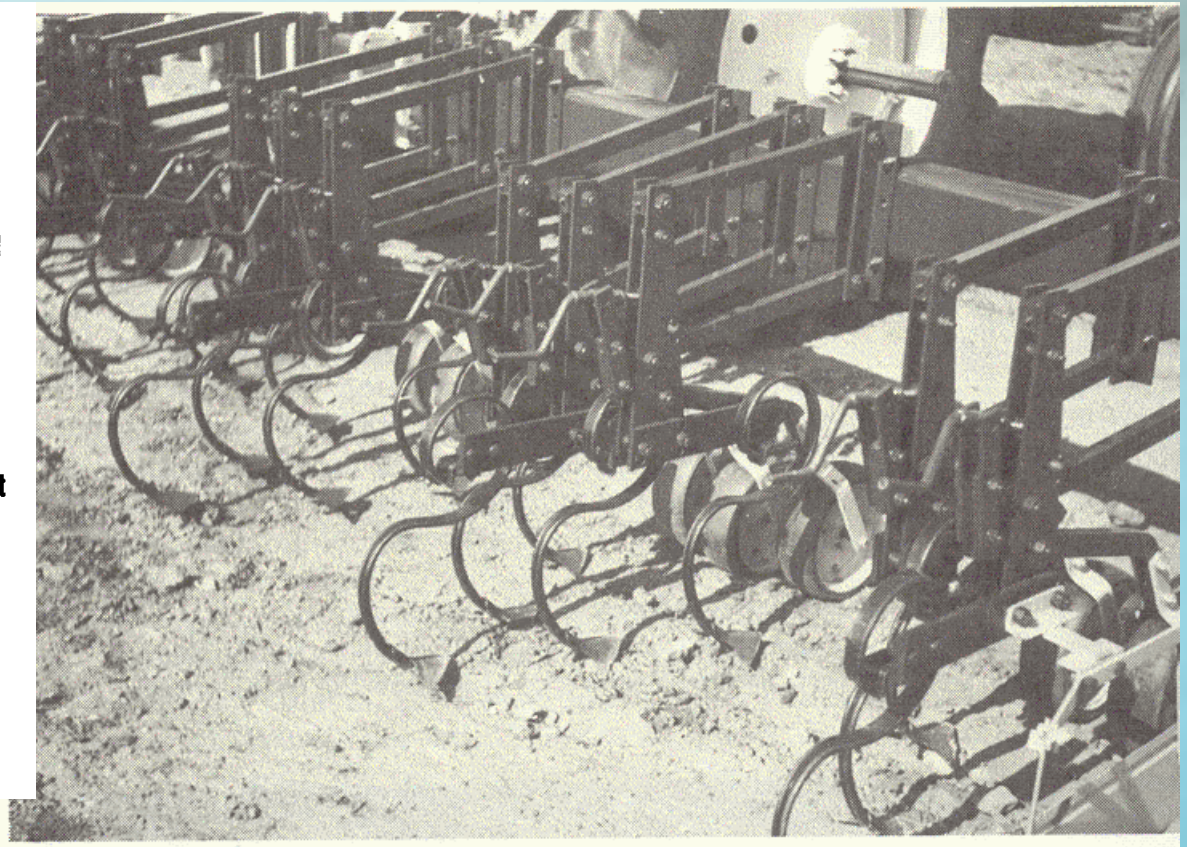

Figure 2–9.
Depth-controlled, spring-tooth, row-crop cultivator. (Courtesy Dickey Machine Works, Pine Bluff, Arkansas.)

Mechanical Tillage – Precision Cultivation

- Before cotton herbicides, growers used meticulous close cultivation and hand hoeing for weed control.
  - Torsion bar and spring-hoe in-row weeders
  - compress and crumble soil at base of cotton uprooting small broadleaf weed seedlings
- Disadvantages of close cultivation and in-row weeders without precision guidance systems:
  - demanded careful attention from the tractor driver
  - required slow travel speeds to minimize crop damage

Mechanical Tillage – Precision Cultivation

- As tractor size increased and tillage implements became larger, tillage implements were mounted on three-point hitches on the back of tractors.
- This introduced the problem of implement “tailout”.

Implement “Tailout”

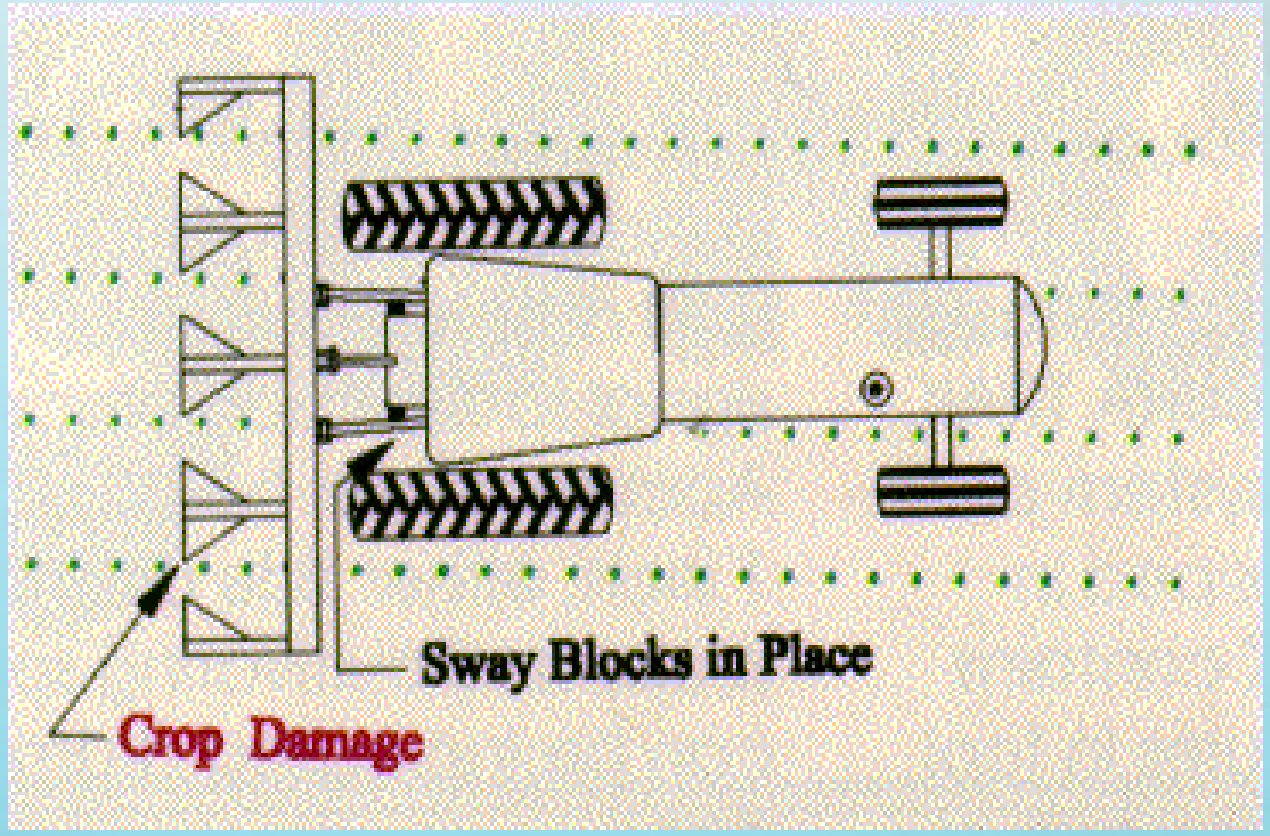

Precision Guidance Systems

- The best precision guidance systems are the electro-hydraulic guidance systems that actively steer the tractor or implement.
  - Quick hitch configurations typically use a sensing device such as a wand to detect crop plants or a furrow probe to detect a furrow.
    - articulated guidance systems that pivot the implement with respect to the tractor
    - side-shift systems that move the implement laterally

Precision Guidance Systems

- Electro-hydraulic guidance systems actively steer the tractor or implement using a sensing device to detect a furrow or crop row.
  - (Figures from Steel in the Field. 1997. Edited by G Bowman. Pages 32-33. Sustainable Agriculture Network handbook series; 2.)

Disk steer

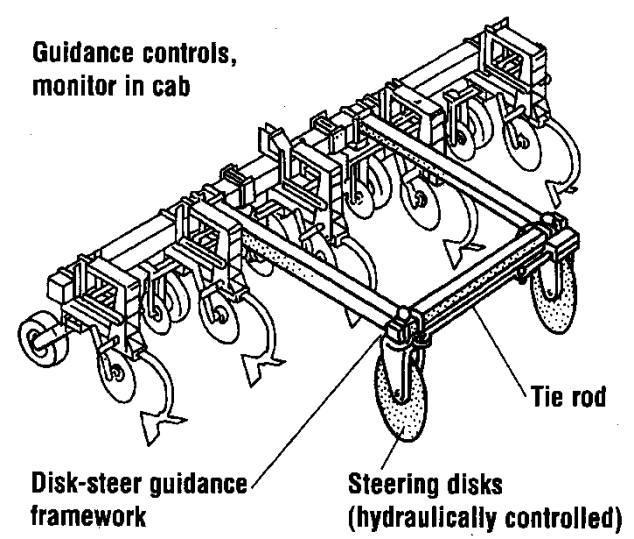

Articulated quick hitch

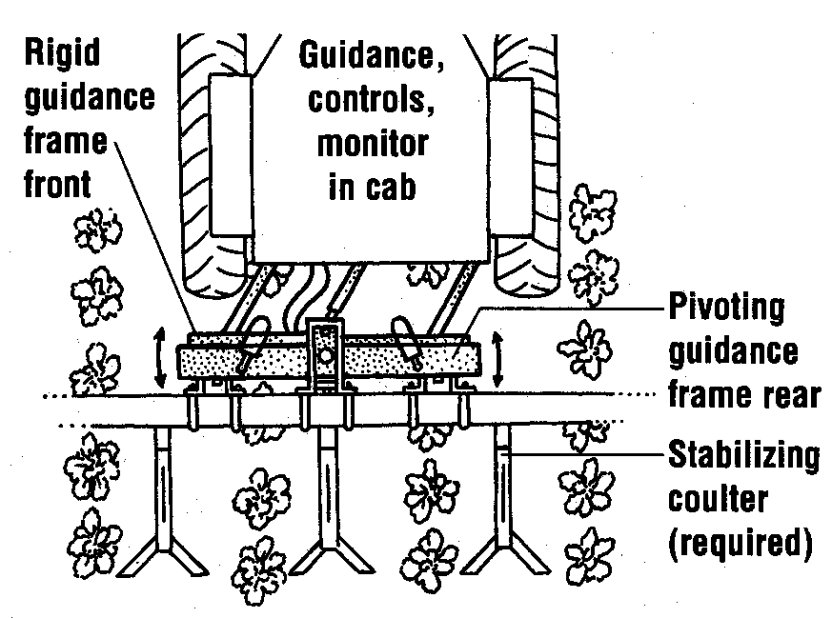

Side shift quick hitch

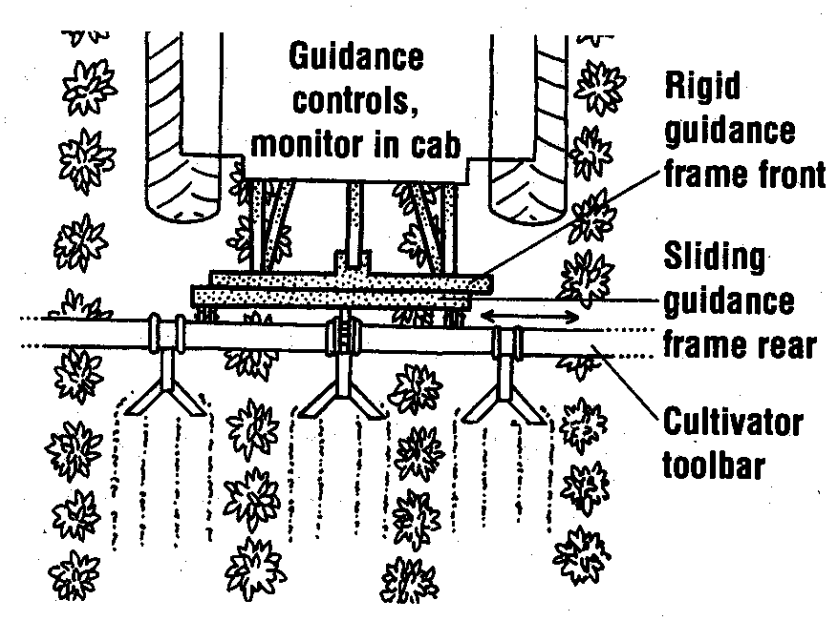

Quick Hitch Guidance Systems

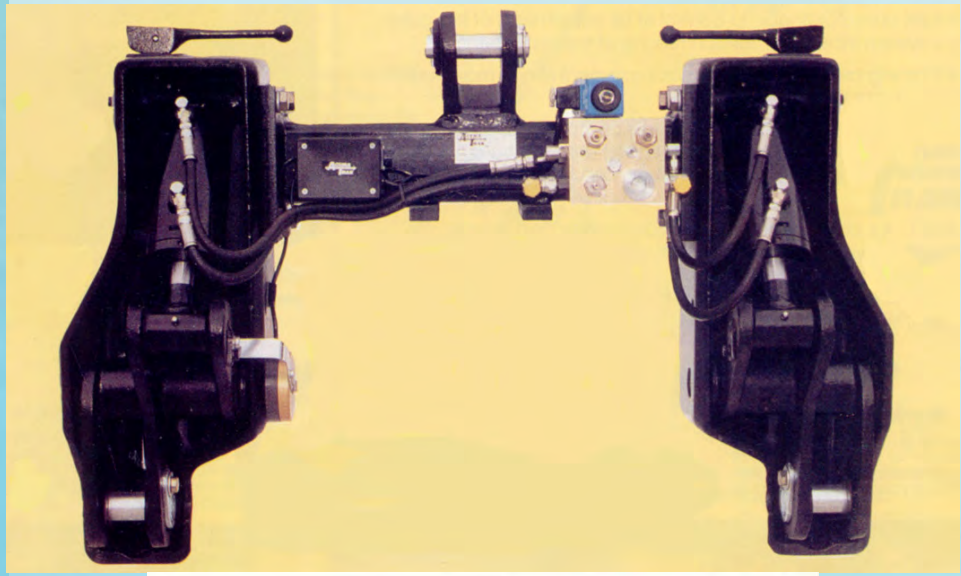

Eliminate “Tailout” - 1

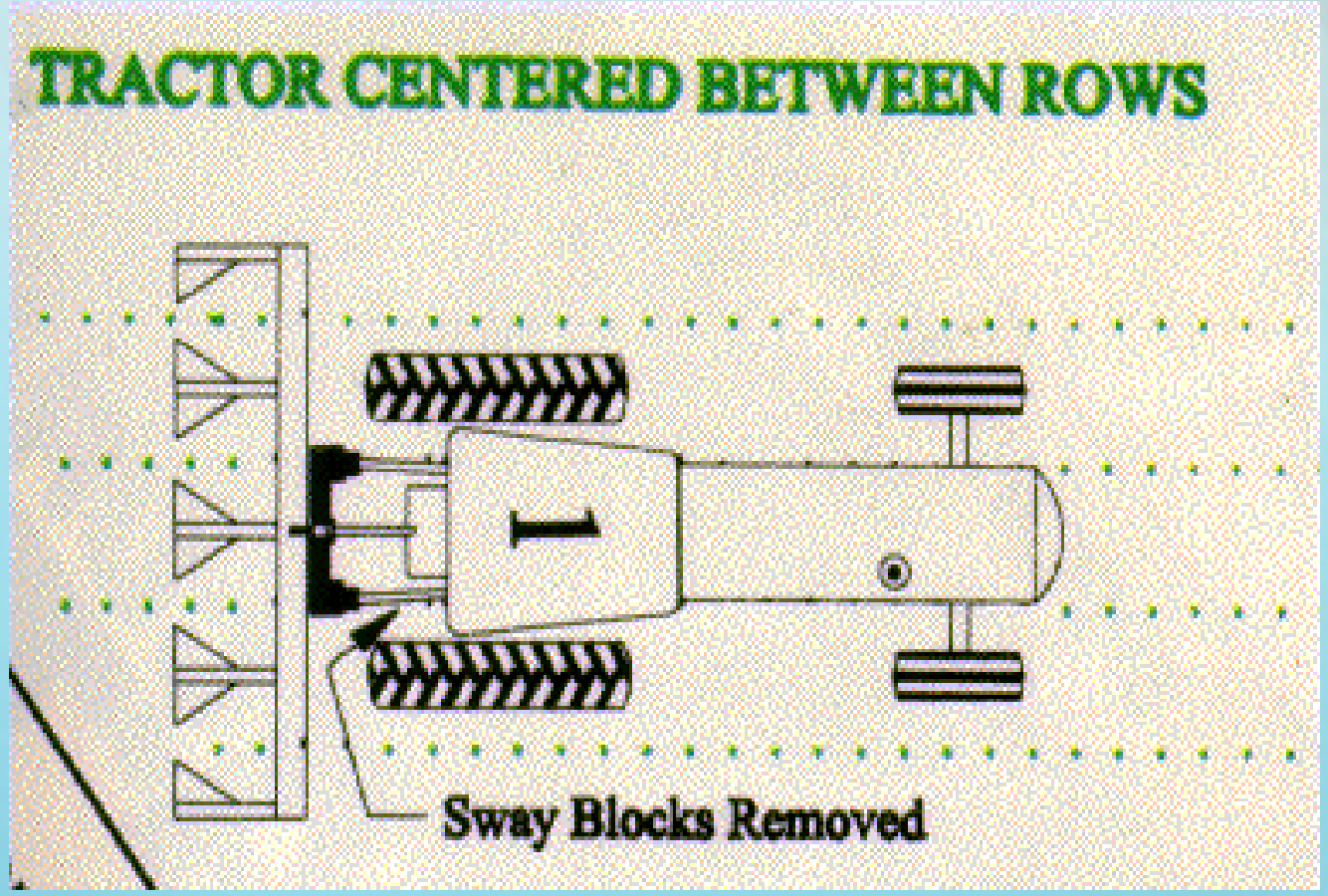

Eliminating “Tailout” - 2

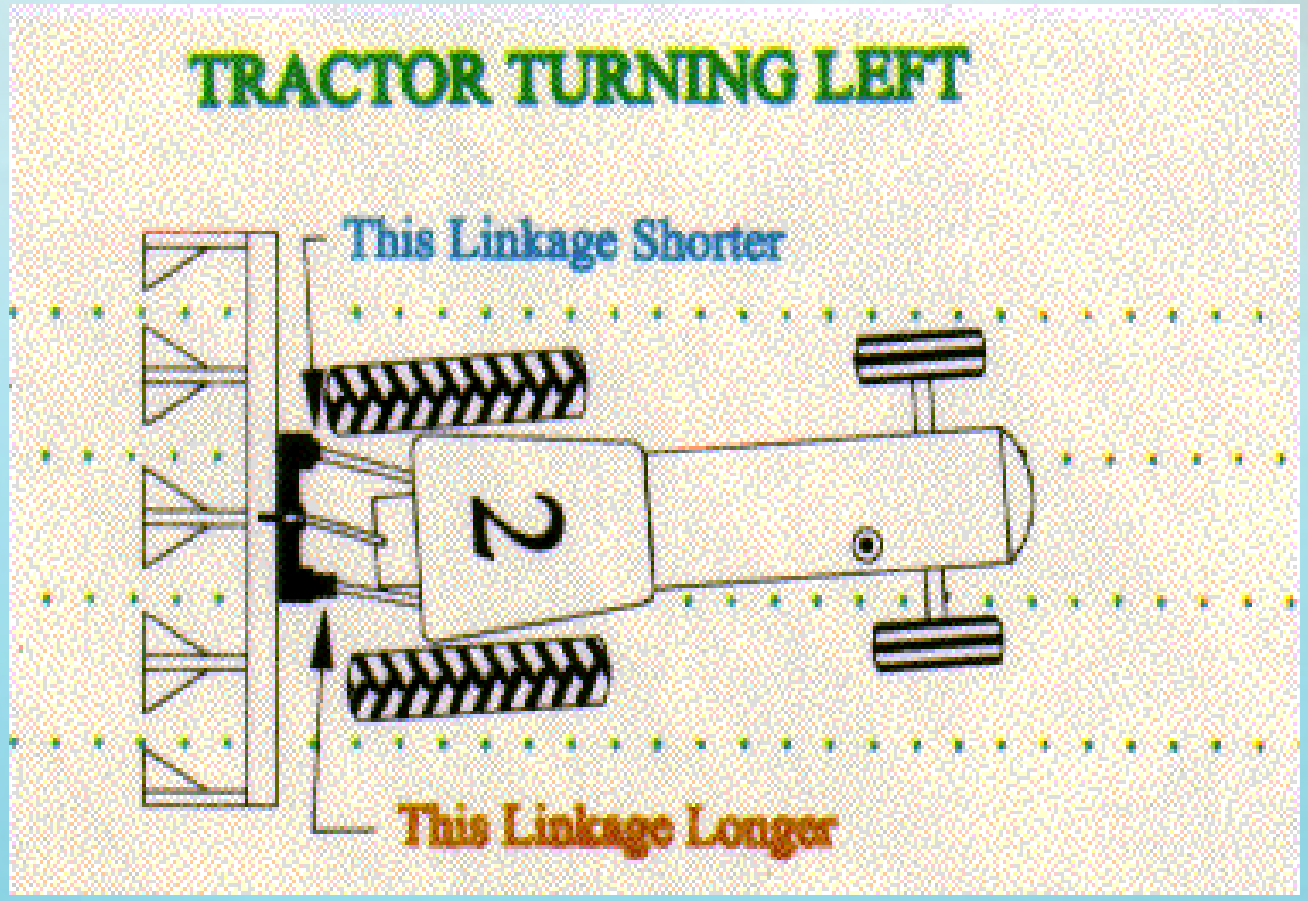

Eliminating “Tailout” - 3

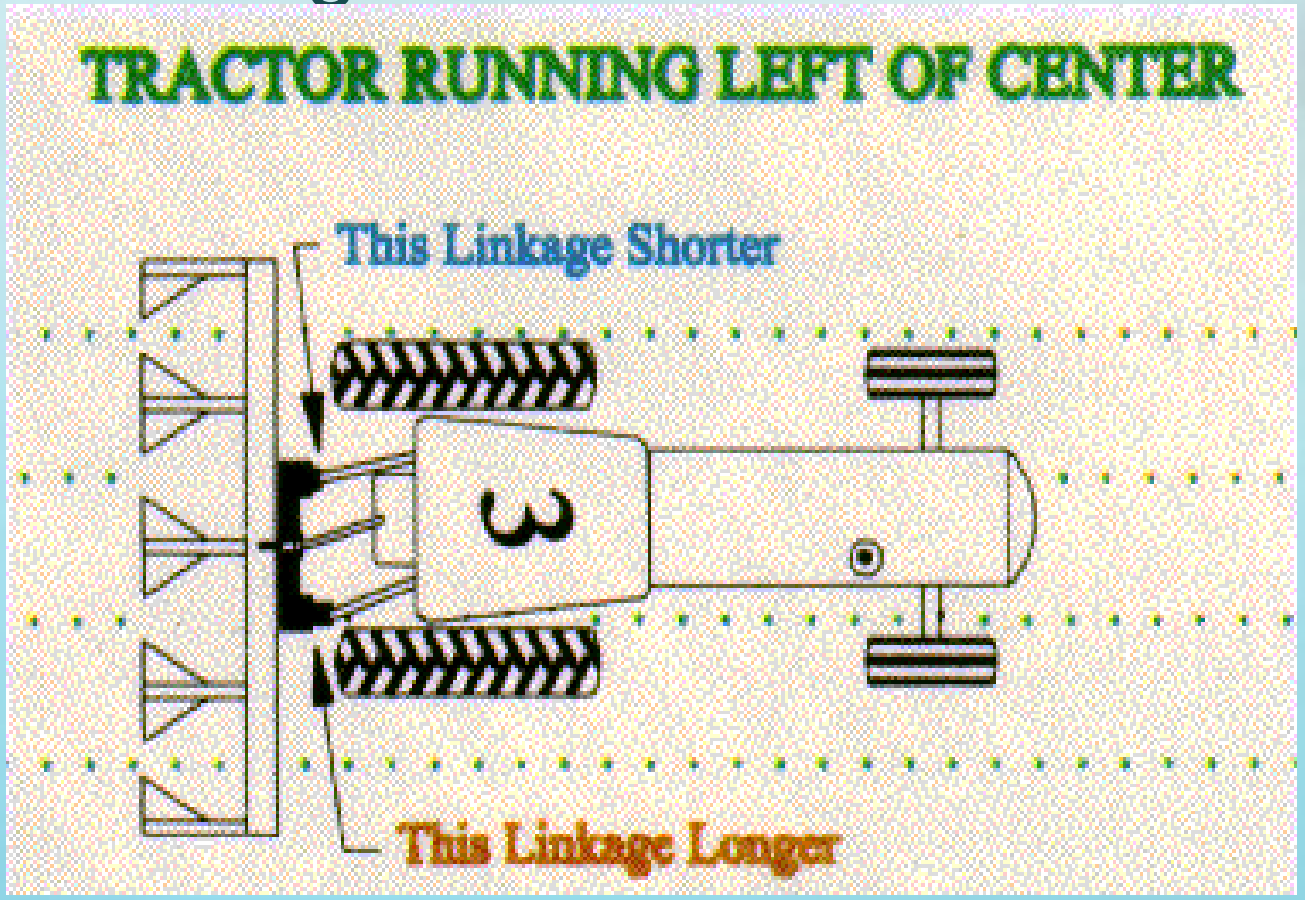

Bezzerides Spring Hoe Weeders

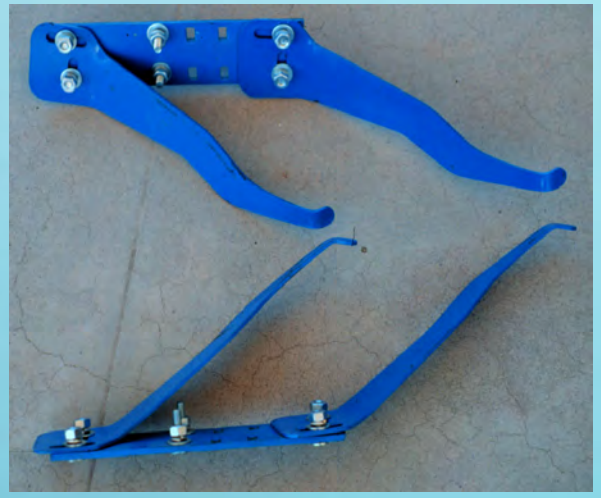

In-row Weeding

Before cultivation

After cultivation

Weed Control – Torsion Bar Weeders

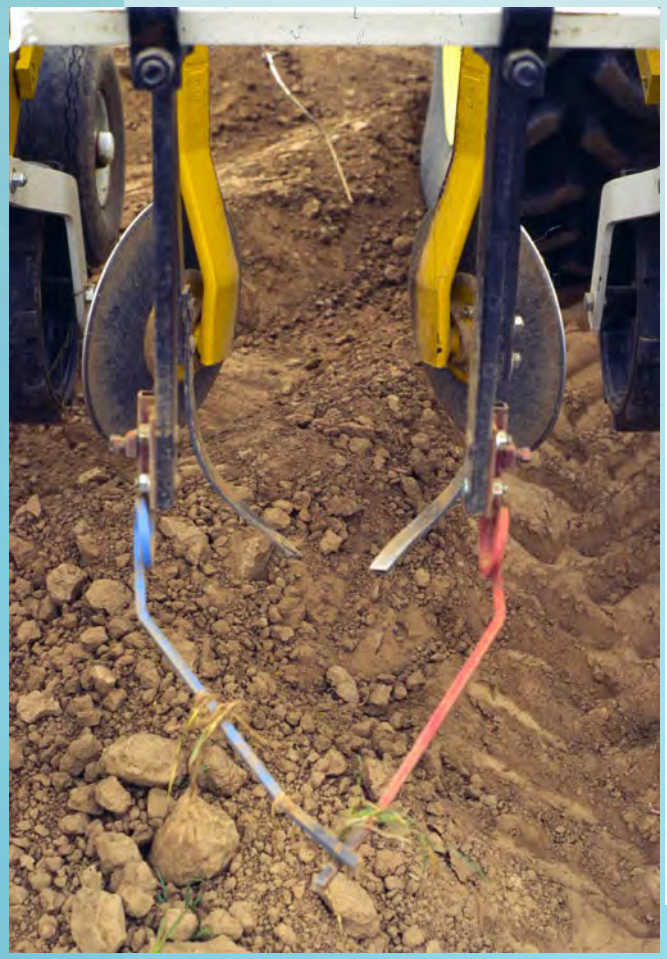

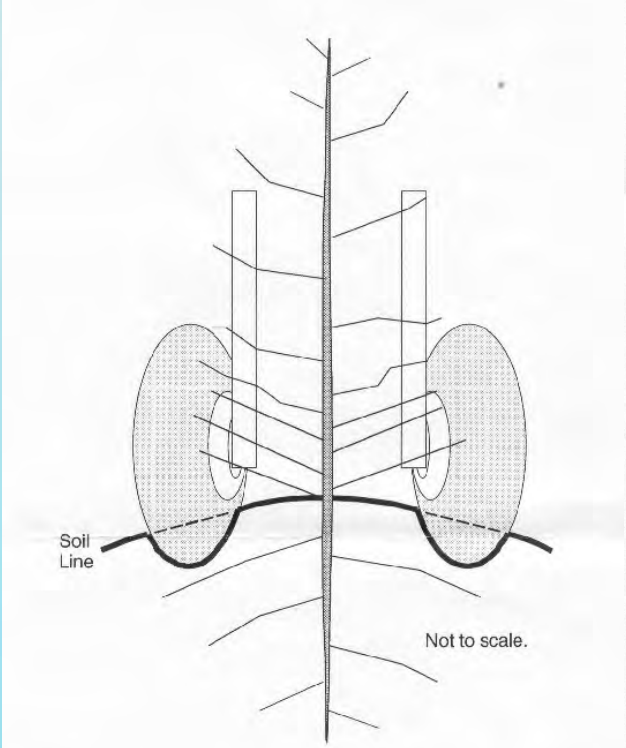

Figure 1. Disks cutting paths through weeds and debris.

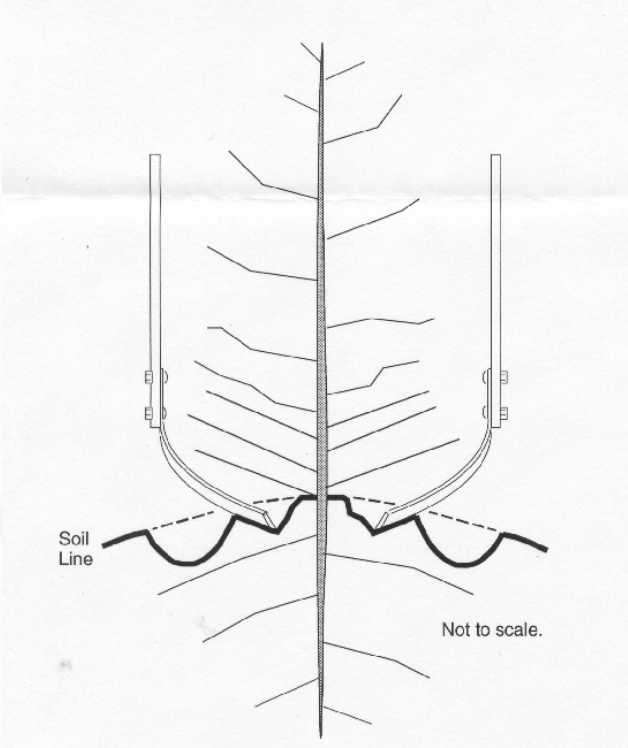

Figure 2. Fixed knives shearing soil beneath the cotton canopy.

Weed Control – Torsion Bar Weeders

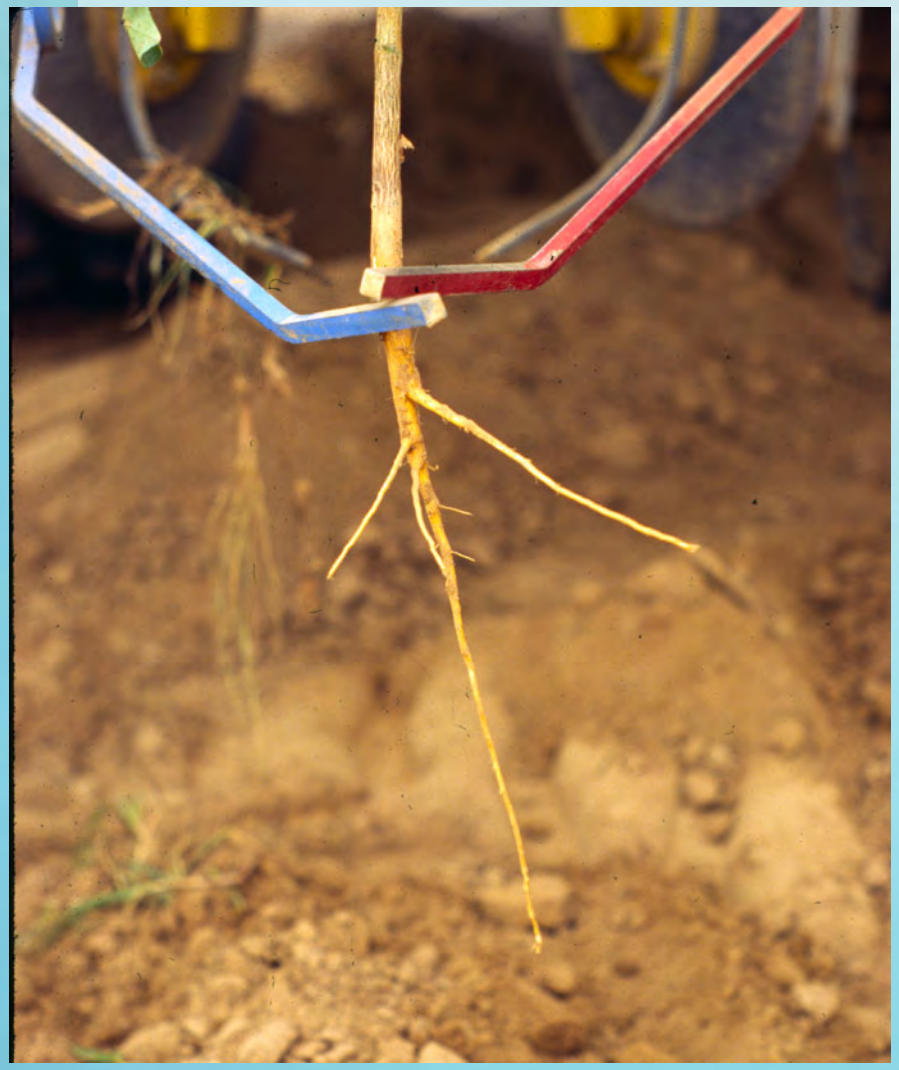

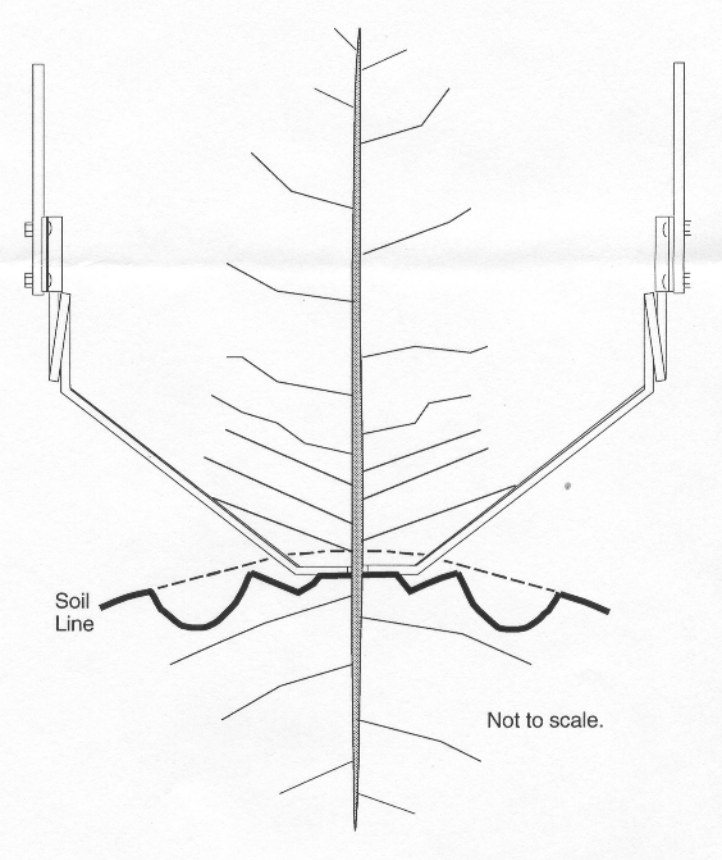

Figure 3. In-row weeders crumble soil and uproot weeds.

Quick Hitch Guidance Systems

Torsion Bar Weeders

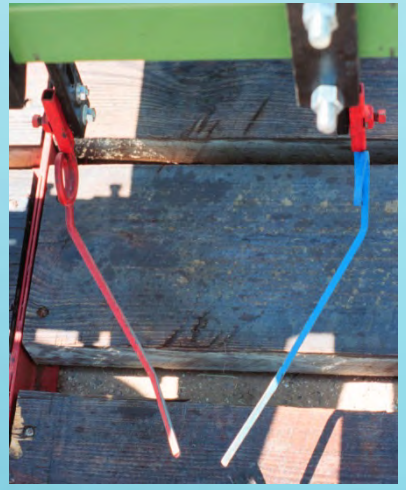

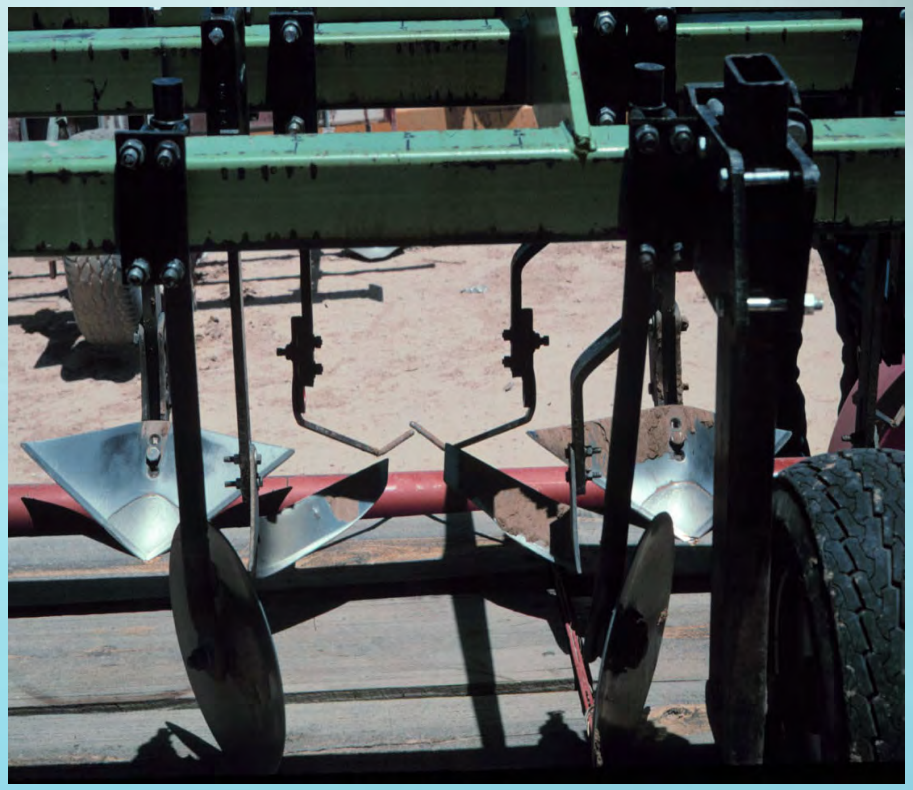

Precision Cultivation Benefits in Cotton

- Precision cultivation and in-row weeding techniques can be integrated to reduce chemical weed control costs.
  - Spray selective herbicides in narrow bands to control weed seedlings in the cotton row early in the season.
    - 8 to 10 in band (20 to 25% band vs 50% band)
- In-row weeders effectively remove broadleaf weed seedlings in the crop row.
- Can eliminate mid-season herbicide applications.

Annual Morningglory & Precision Cultivation

Treatment	Average Number of Morningglory plants per 1.14 acre plot	
	August 2	September 8
Directed spray (diuron)	9.75	8.5
Torsion weeders w/o directed spray	9.75	14.0
Torsion weeders and directed spray	2.5	2.5

Purple Nutsedge & Precision Cultivation

- In-row weeders are not effective at removing purple and yellow nutsedge from the seed row. However, close cultivation does reduce nutsedge competition with cotton.

Precision Cultivator

Standard Cultivator

Purple Nutsedge & Precision Cultivation

Treatment	Plant Height (in)	Seed Cotton Yield (lb/acre)
Standard cultivator w/o DSMA	55.7 a	2674 bc
Standard cultivator w/ DSMA	54.8 a	2340 c
Precision cultivator w/o DSMA	52.5 a	3015 ab
Precision cultivator w/ DSMA	50.7 a	3502 a

Precision Cultivation – Potential Problems and Challenges

- Cotton - 12 inches tall with bark on the lower stem to use in-row weeding.
- Crop must have a well developed tap root.
- In-row weeding techniques will not work with many crops
  - Herbaceous row crops (i.e., corn, sorghum, vegetables)
  - Broadcast seeded crops (i.e., alfalfa, wheat)

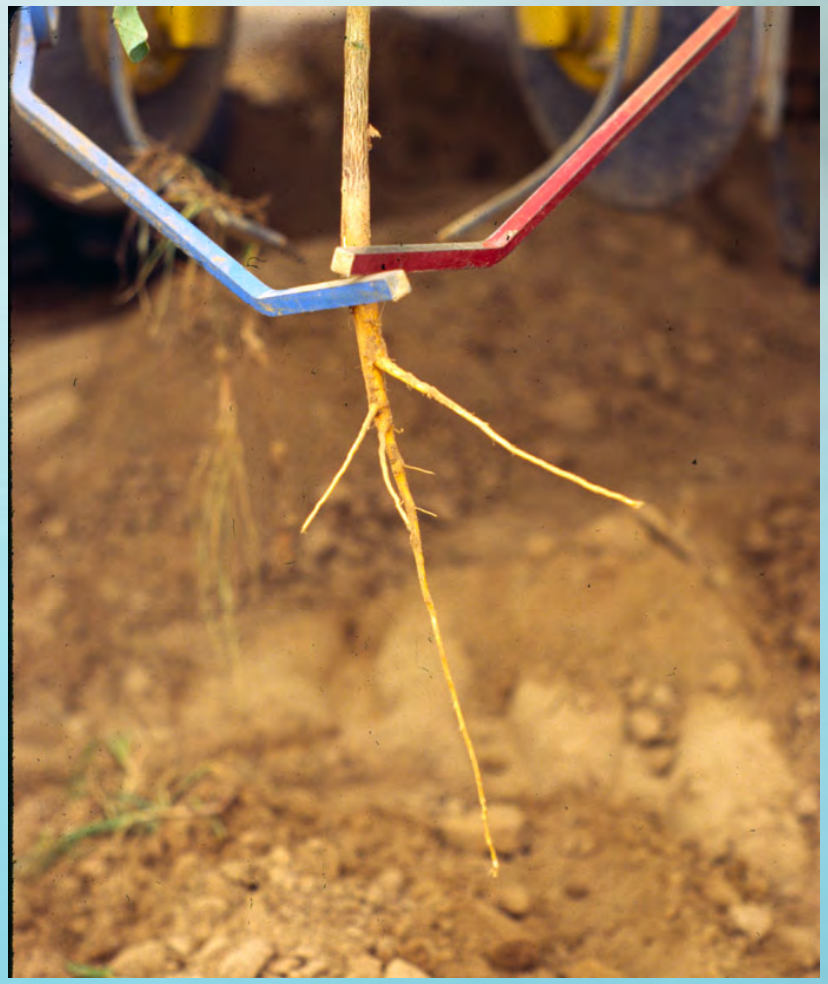

Precision Cultivation Adoption

- Precision cultivation demonstrations were conducted in Arizona and about a dozen Acura-Trak systems were purchased.

Precision Cultivation – Potential Problems

- However, many growers who purchased quick hitch guidance systems are no longer using them.
- Greatest difficulty is with the sensing technology (i.e., the mechanical wand used to sense the location of the crop row.
  - Small cotton (less than 8 to 10 in tall) could not be reliably sensed with a mechanical wand; the cotton was not strong enough to guide the wand.
  - Gaps in the seed row further compounded the problem of sensing where the crop row is located.
- Cotton must be 12 inches tall with bark on the lower stem to use precision cultivation with in-row weeding.

Precision Cultivation – Potential Problems

- Precision cultivation cannot be used in crops that don't have woody stems to guide the wand.
- Need to use guidance systems should be used for most early season field operations such as listing and planting (but guide furrow difficult to use).
- Generally requires more management to integrate herbicides and precision cultivation.
- Requires a more skilled tractor driver. Employee turnover discourages the use of guidance systems due to the need to train drivers.
  - GPS with differential signal correction and tractor steer systems eliminate the problems of implement "tailout" and the need for skilled tractor drivers but introduce the problem of driver inattention (e.g., California)

Future of Precision Cultivation

- Differential GPS and centimeter level accuracy using Real-Time Knematic (RTK) can accurately control a tractor/cultivator without mechanical sensing guides.

- A digital camera and optical sensor in ECO-DAN Guidance Systems can also keep a cultivator accurately following a crop seed line without a mechanical sensing element.

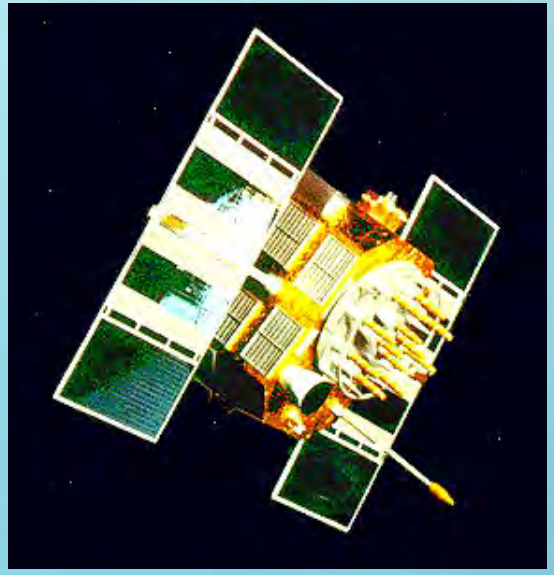

Eco-Dan Precision Cultivation

Dense weeds can defeat EcoDan system (one camera)

Reinvestigated Precision Cultivation with RTK Guidance with Dr. Pedro Andrade-Sanchez

- Real time kinematic guidance requires locking cultivator in position – no movement independent of tractor.
- Need to use RTK guidance for all field operations from field preparation and planting to cultivation.

GPS-RTK + Tractor Auto Steer Systems

<u>Key components:</u>

- May need disk stabilizers to stop implement drift

- Adjust sway blocks to allow implement to run at correct depth. Implement must not rotate with respect to tractor.

Collaboration with Mark Siemens UArizona Agricultural Engineer Cotton and Chile Peppers

K.U.L.T. Kress Camera Guided Cultivator

K.U.L.T. Kress Camera Guided Cultivator

K.U.L.T. Kress Camera Guided Cultivator

K.U.L.T. Kress Camera Guided Cultivator

K.U.L.T. Kress Camera Guided Cultivator

K.U.L.T. Kress Camera Guided Cultivator

K.U.L.T. Kress Camera Guided Cultivator

Maricopa Ag Center Cotton Cultivation Results (Siemens & McCloskey)

Percent Weed Control

Treatment	**Prostrate Pigweed**	**Other Broadleaves**	**All Grasses**	**All Weeds**
Conventional – 10”	80	68	40	68
GPS-RTK – 6”	65	60	57	62
GPS-RTK – 6” with finger-weeders	87	75	60	75
Cam-Guided – 3.5”	82	95	79	82
Cam-Guided – 3.5” with finger weeders	90	97	73	85

Maricopa Ag Center Cotton Cultivation Conclusions (Siemens & McCloskey)

- GPS-RTK
  - Did not significantly improve weed control
- Finger-Weeders
  - Controlled ~ 50% of in-row broadleaf weeds
  - Not effective on large, deep rooted grasses
- Camera Guidance
  - Allowed close cultivation, improved weed control by 28%
  - In conjunction with finger weeders – excellent broadleaf weed control (> 90%)

Cochise County Field Day – Curry Farms

Cochise County Field Day – Curry Farms

Cochise County Field Day – Curry Farms

Cochise County Field Day – Curry Farms

Automated Lettuce Thinner (spot sprayer)

Yuma Ag Center – Fall 2018
Automated Lettuce Thinner (spot sprayer)

Yuma Ag Center – Fall 2018
Automated Lettuce Thinner (spot sprayer)

Yuma Ag Center – Fall 2018
Mechanical Lettuce Thinner

Yuma Ag Center – Fall 2018
Mechanical Lettuce Thinner

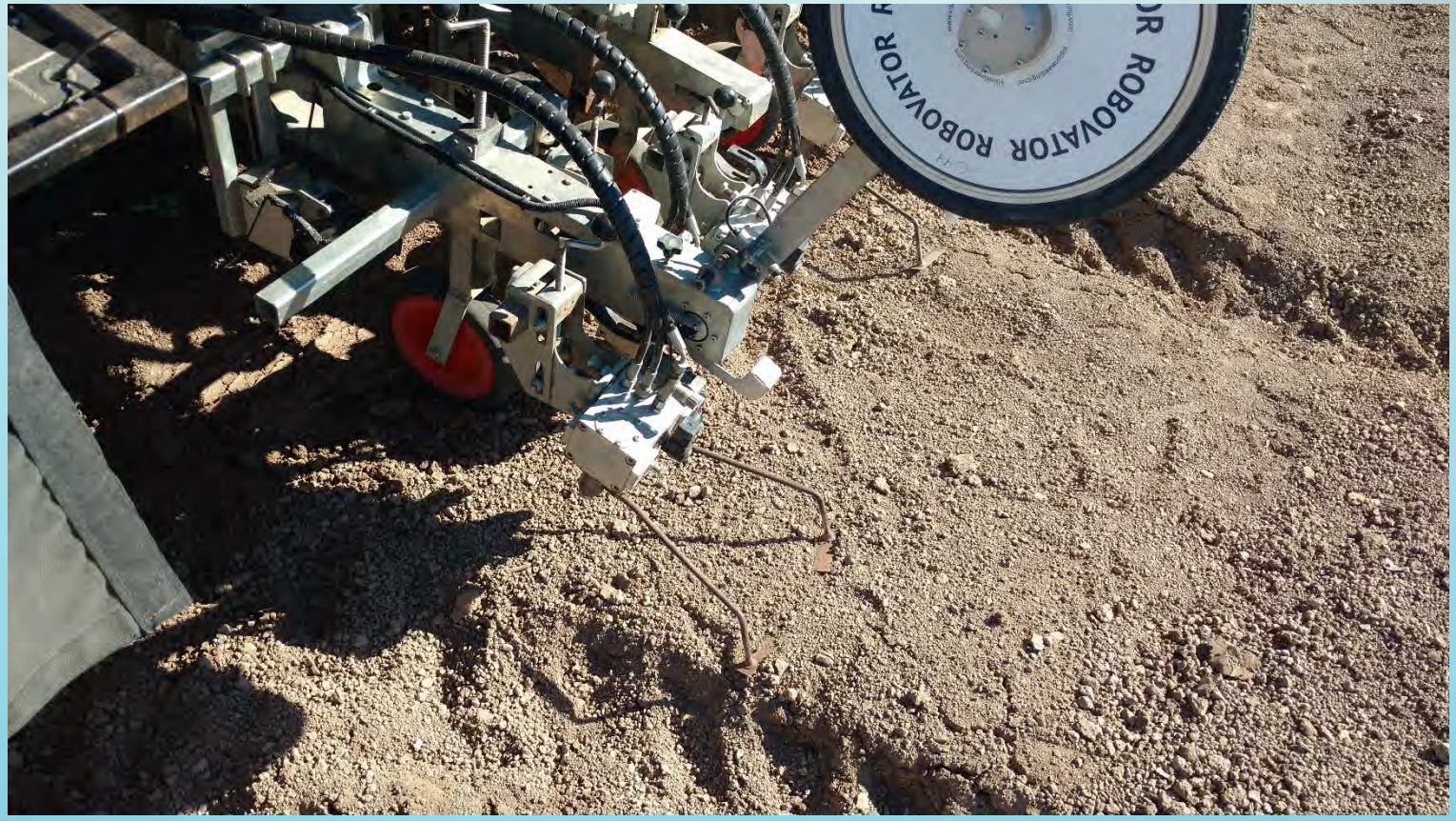

Garford Mechanical Weeder

Approximate cost:
$20,000-$25,000/row

https://youtu.be/U1fWYFonu_k

Future of Precision Cultivation

- The future of precision cultivation partly depends on:
  - Economic returns to organic producers (5% of food market)
  - Improvements in and cost of competing technologies (e.g., herbicide resistant crops – cost of spraying chemical).
  - Adoption of no-till, reduced till or conservation tillage practices
    - Greater reliance on chemicals
    - Shift in weed species to more tolerant species
    - Herbicide resistance
  - Cost of tillage in both economic terms (capital in tractors,cuiltivators, labor, fuel, etc.) and biological terms
    - PM10 dust
    - Erosion

Disadvantages of Tillage

- Conventional tillage exposes soil to the elements so that they are subject to wind erosion (especially coarse-textured soils) and water erosion (especially sloping soils).
- Burial of weed seeds can induce dormancy and preserve seed in the soil seed bank.
- Where soil near the surface is relatively free of weed seeds, deep running tillage tools may bring buried weed seeds to the top of the soil profile and contaminate relatively clean soil near the surface.
- Tillage implements can spread weed seed and vegetative propagules of perennials to uninfested areas.

Disadvantages of Tillage

- Tillage can damage crop roots – row crops and woody perennial crops (orchards and vineyards).
- Rainfall interferes with timely cultivation for weed control.
- Tillage of wet soil destroys soil aggregates and structure, and causes compaction that limits water penetration and root growth.
- Adoption of reduced tillage and conservation tillage systems
  - Requires different types of soil moving implements that will work in hard soils, and with more residue on the surface (economics).
  - Soil penetrating equipment is usually heavier.
  - Not plugged by surface crop residues.